Patent application looks at smart doorbell sniffing, ACLU reacts

December 17 2018, by Nancy Cohen

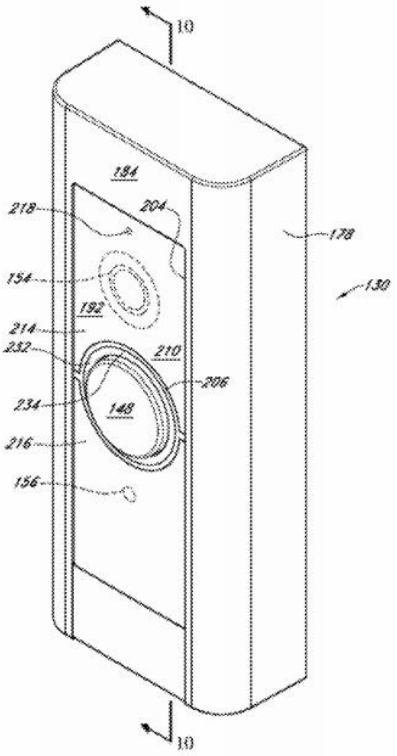

Figure 4

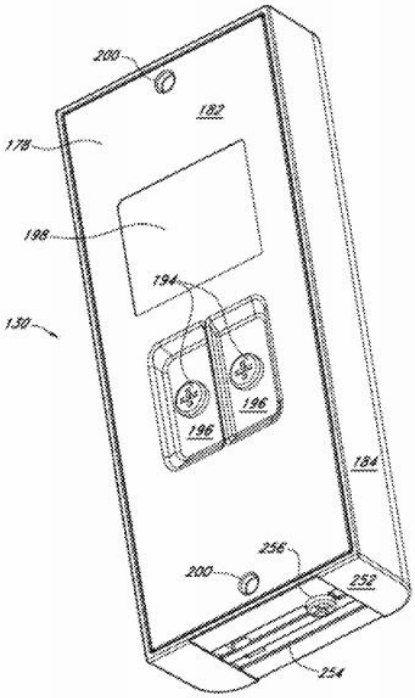

Figure 5

Facial recognition tech added to video-laden doorbells to track "suspicious" people? Sounds like a thorny concept, as people are still reeling over privacy and the lack thereof in very recent times. "Face" it, facial recognition emotionally are words that are the current opposites of mom and apple pie. And now this: CNET reported that Amazon's Ring was taking heat in the corridors of opinion for even considering facial recognition for its video doorbells.

The application was revealed by the U.S. Patent and Trademark Office last month and reported by CNET along with other sites. Ben Fox Rubin in CNET reported that the video and audio-laden doorbell company called Ring (Amazon acquired Ring this year) filed a facial recognition patent application which drew criticism for considering ways of using Ring's products to spot suspicious people in a neighborhood and then alert law enforcement.

He quoted a statement from the ACLU that "Amazon is dreaming of a dangerous future." Concern is twofold, that such usage could invite a surveillance state seeking to target political activists and seeking to target those unfairly deemed as threats to the public.

The filing In November was an application to patent software for Ring video doorbells, according to reports, which include a motion-activated video camera and microphone and are connected to the Internet.

Jacob Snow, Technology & Civil Liberties Attorney, ACLU of Northern California, wrote that this is a system that the police can use to match the faces of people walking by a doorbell camera with a photo database of persons deemed "suspicious." Homeowners can add photos of "suspicious" people into the system. The facial recognition program would scan anyone passing. If a match occurs, "the person's face can be automatically sent to law enforcement, and the police could arrive in minutes."

Snow also said, "It's time for Amazon to take responsibility and stop chasing profit at the expense of safety and civil rights."

Andy Meek in *BGR* walked readers though the idea discussed in the patent. "The patent application envisions using a combination of doorbell cameras and facial recognition technology to build a system that could be used to match images of people who show up at your door to a 'suspicious persons' database. The system would even pull up information about that person if it finds a match in the database." When the system gets a hit after database search, details could be sent to police.

"As a former patent litigator, I've spent a lot of time reading patents. It's rare for patent applications to lay out, in such nightmarish detail, the world a company wants to bring about," said Snow.

A report about the patent filing was also carried in *The Washington Post*, owned by Jeff Bezos. The reporter pointed out that "The company said both Ring and Amazon are in the habit of filing forward-looking patent applications that explore the possibilities of new technology. Noting that the patent has not been issued by the patent office, Amazon said patents do not necessarily reflect product development plans."

Meek also mentioned the Amazon Rekognition facial recognition system. Amazon defines Amazon Rekognition as "a service that makes it easy to add powerful visual analysis to your applications. Rekognition Image lets you easily build powerful applications to search, verify, and organize millions of images. Rekognition Video lets you extract motion-based context from stored or live stream videos and helps you analyze them."

Daily Mail said that in an emailed statement, "the firm said it has ' many useful applications in the real world', such as locating lost children at amusement parks. It also noted that the company 'requires that

customers comply with the law and be responsible when they use' its software products."

More information: Amazon patent application: www.aclunc.org/docs/Amazon_Patent.pdf

© 2018 Science X Network

Citation: Patent application looks at smart doorbell sniffing, ACLU reacts (2018, December 17) retrieved 19 April 2024 from https://techxplore.com/news/2018-12-patent-application-smart-doorbell-sniffing.html

This document is subject to copyright. Apart from any fair dealing for the purpose of private study or research, no part may be reproduced without the written permission. The content is provided for information purposes only.